MERCURY MAGNETICS
10050 Remmet Avenue
Chatsworth, CA 91311

Phone 818-998-7791
Fax 818-998-7835
mercurymagnetics.com

APS JETC-50W-PU Power Transformer

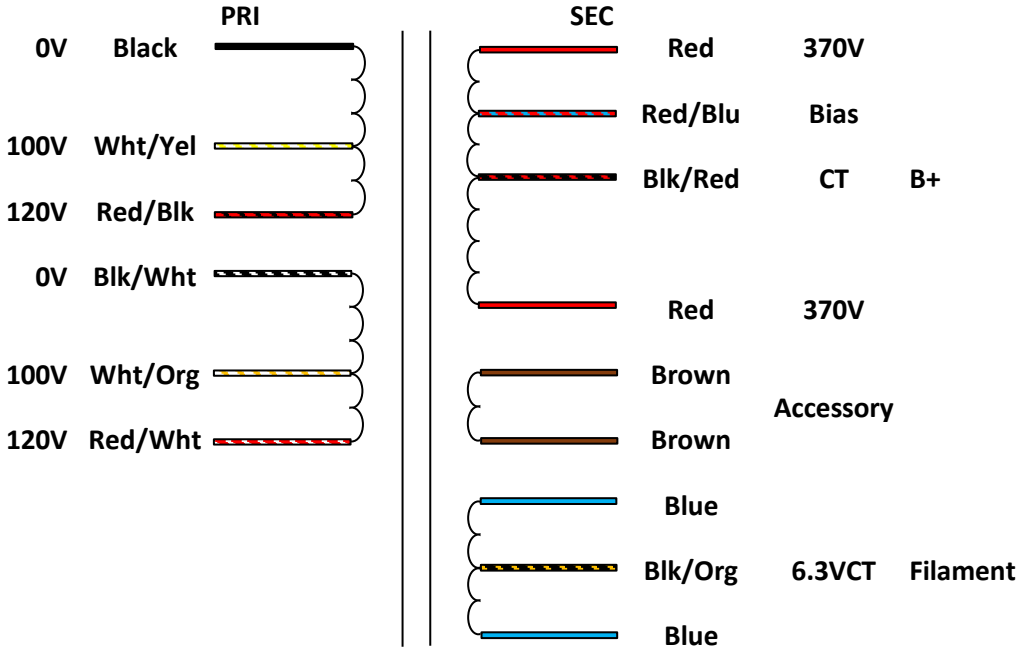

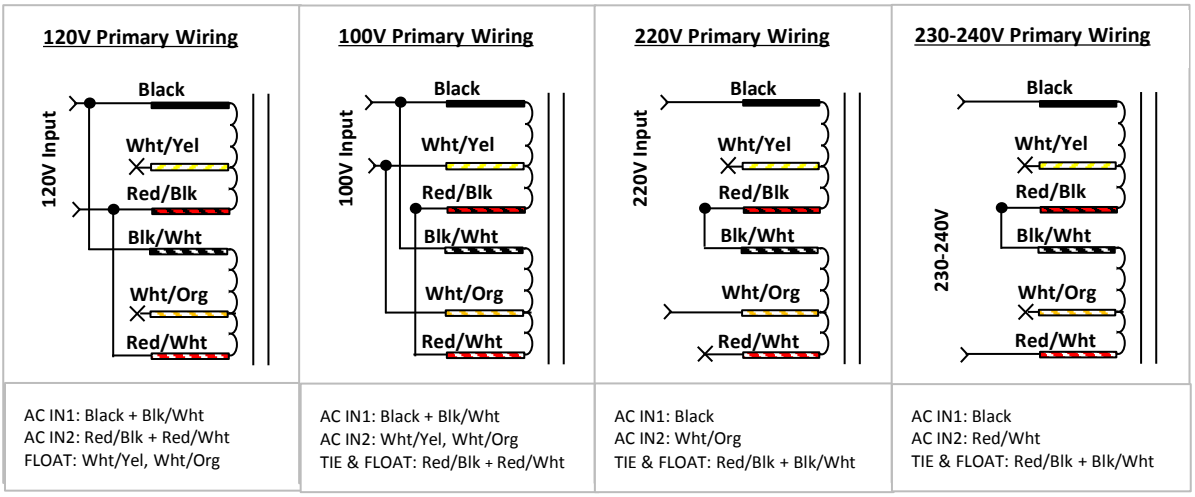

7/16/2019