# FLAT MOUNT (4-HOLE)

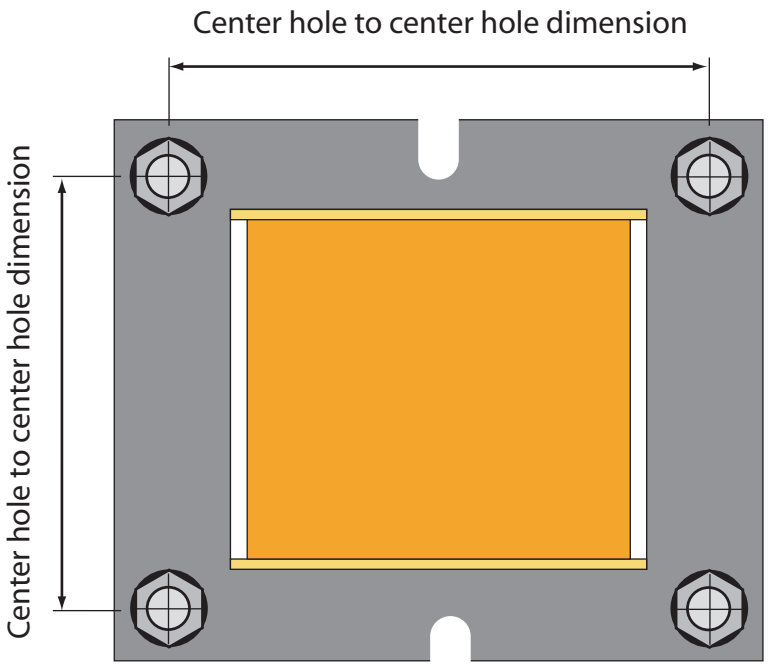


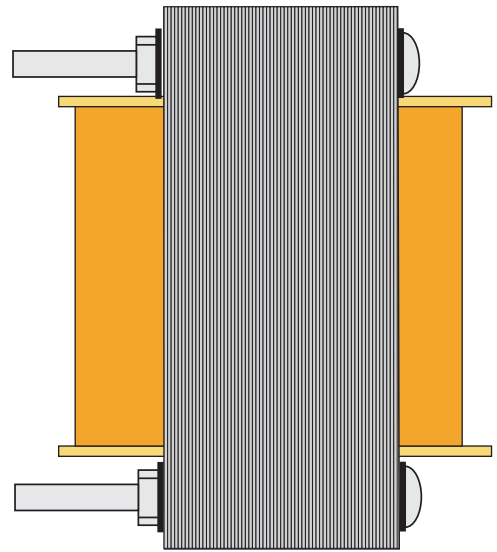

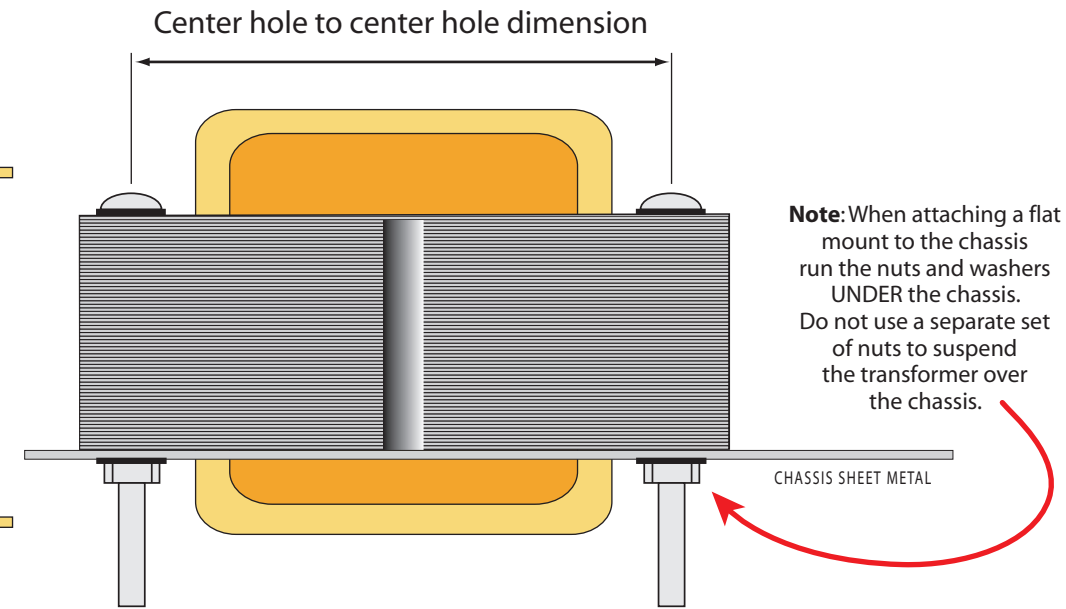


**Note**: When attaching a flat mount to the chassis run the nuts and washers UNDER the chassis. Do not use a separate set of nuts to suspend the transformer over the chassis.